P2 Series Lining Guide
Installation and Parts List

Baytex

Simplicity • Performance • Style

P2 Lining - Gathered

RAINIER

Exclusive USA Distrubiters

www.rainiertents.com

P2 Lining Installation Guide

1a. Attach Halyard Pulley to Apex Fitting
- use shackle

1b. Attach Halyard Pulley to Apex Purlin
- use web Loop

2. Thread Halyard through Lifting Ring and Pulley

3. Thread Halyard through Knee Fitting

4. Layout Ground Cover

5. Attach Panel Apex Patch to Lifting Ring

6. Connect Sister Clips

7. Pull Liner out to Eave Rail
- Attach Bungy Hook

8. Attach some Structure Hooks
-Refer to detail 13.

9. Velcro Panels together

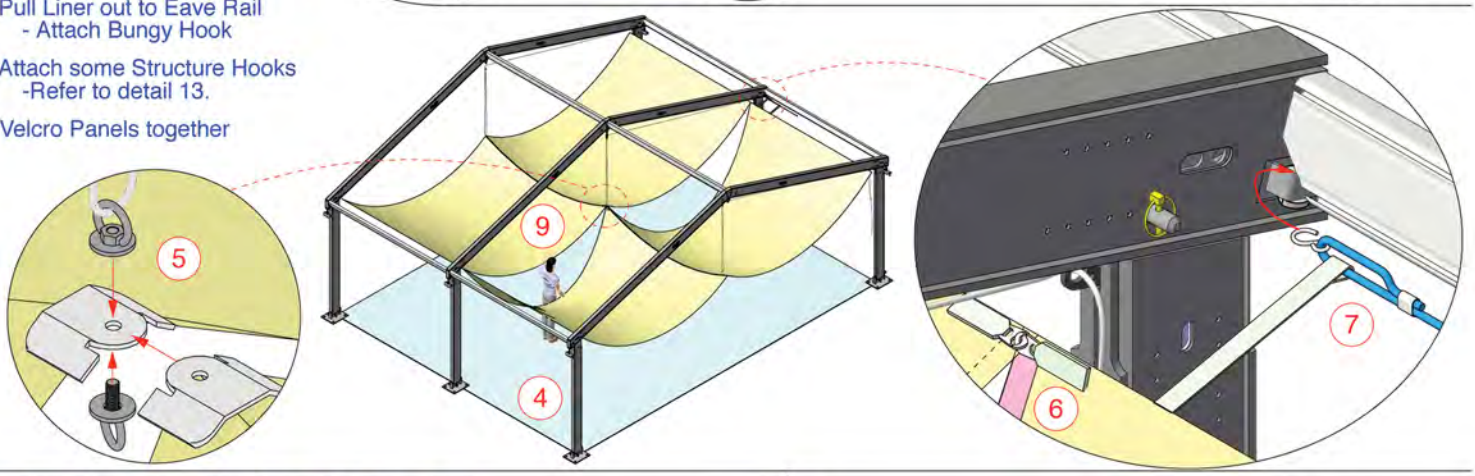

10. Attach Gable Apex Patch and Mid Apex Patch to Lifting Ring

11. Fasten Corner Strap to Leg
- thread through Cambuckle

12. Velcro Panels together

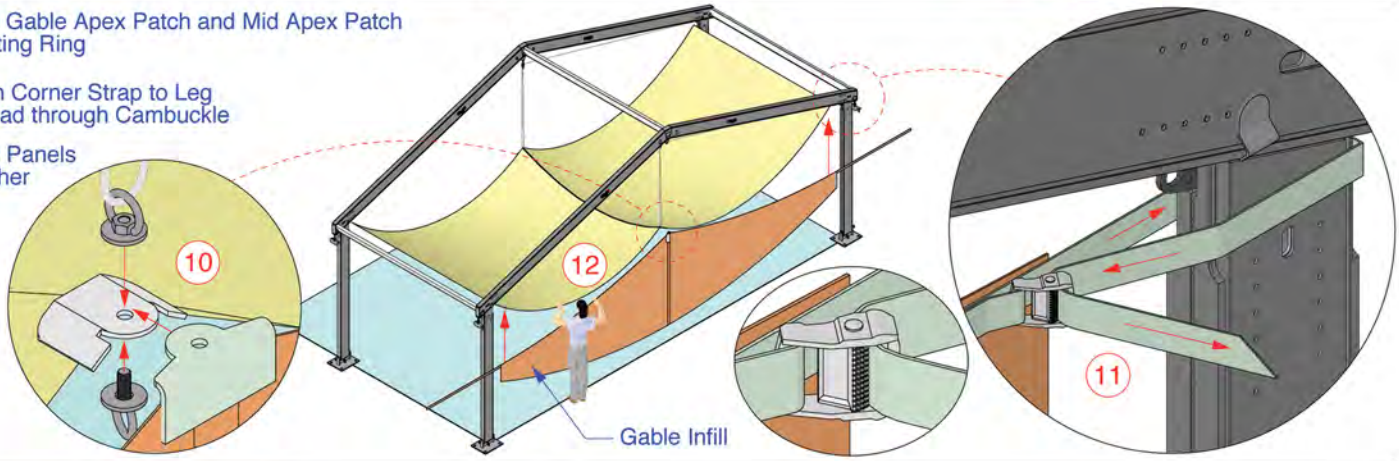

13. Attach balance of Structure Hooks
-twist to insert

14. Raise Liner to Finished Height
-Gable Eave Line is Straight

15. Tie Up Halyards at Eave
-out of sight

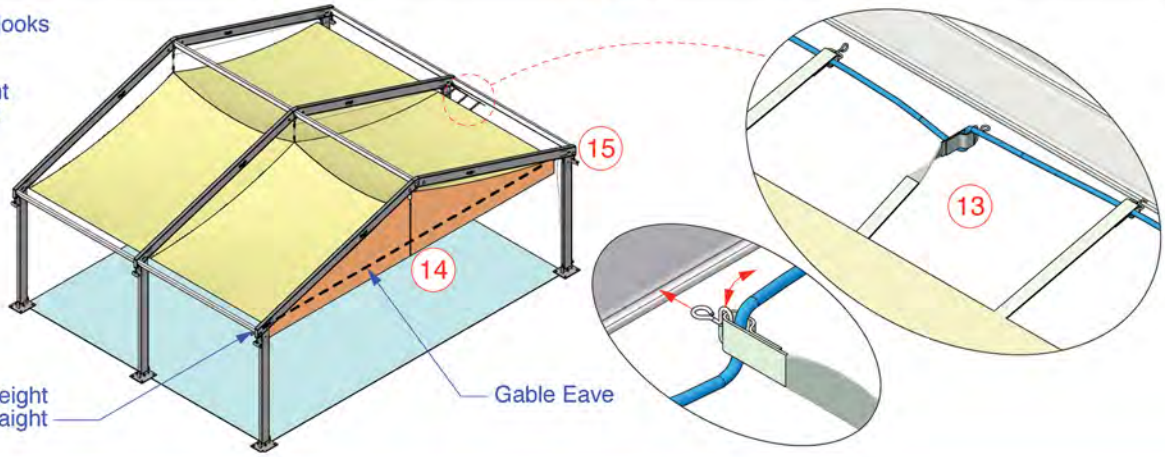

P2 Lining Installation Guide

Parts Guide

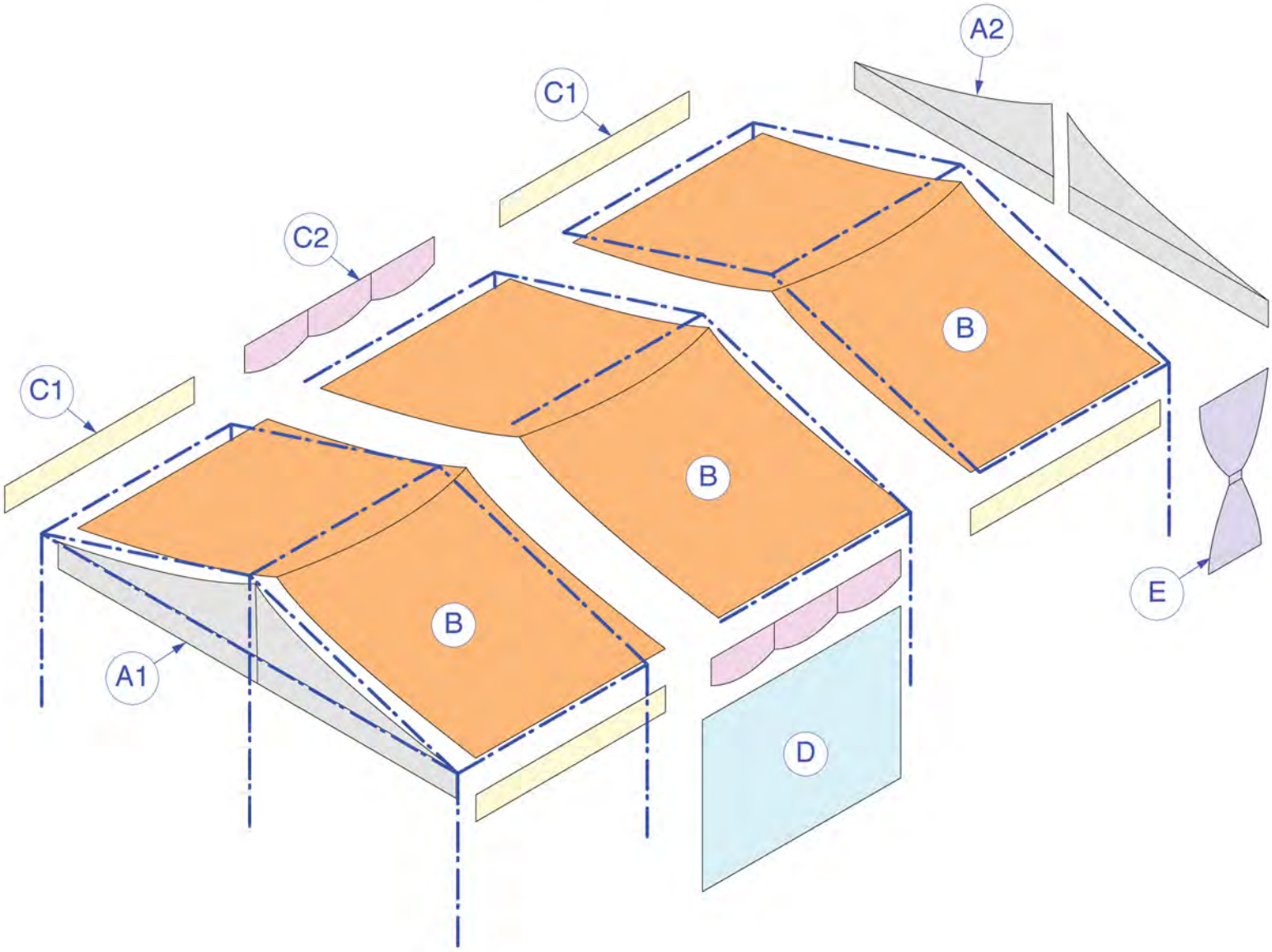

P2 Liner: Components	
Ref.	**Part Name**
A1	Gable Infill - One Piece
A2	Gable Infill - Two Piece
B	Mid
C1	Detachable Valance - Std
C2	Detachable Valance - Swage
D	Wall
E	Leg Drape

Baytex

Simplicity • Performance • Style

P2 Series Lining Guide
Installation and Parts List

P2 Lining - Flat

Rainier Industries Ltd

18375 Olympic Avenue South
Tukwila,
WA 98188

RAINIER

tentinfo@rainier.com
800-621-2495

www.rainiertents.com